Cylindrical roller bearing N318 ECP SKF

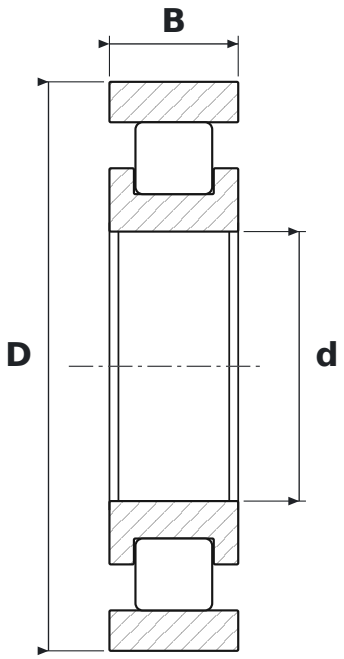

DIMENSIONS

d	bore diameter	**90 mm**
D	outside diameter	**190 mm**
B	width	**43 mm**

SPECIFICATIONS

Manufacturer	**SKF**
Manufacturer designation	**N318 ECP**
Rolling elements	**single-row cylindrical roller bearing**
ECP	**EC design, polyamide cage (SKF)**
Seal	**open – no seals**
Radial internal clearance	**CN – normal**
Cage	**Polyamide**
Mass	**5.314 kg**