Cylindrical roller bearing N318-EM1 FAG

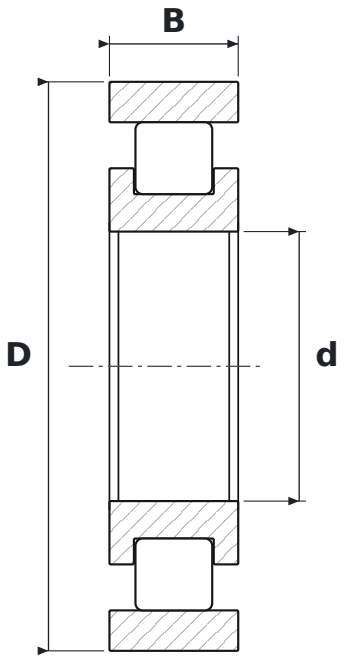

DIMENSIONS

d	bore diameter	**90 mm**
D	outside diameter	**190 mm**
B	width	**43 mm**

WHAT N318-EM1 MEANS

E	reinforced design, higher load rating
M1	koszyk mosiężny masywny, dwuczęściowy, prowadzony na wałeczkach

SPECIFICATIONS

Manufacturer	**FAG**
Manufacturer designation	**N318-EM1**
Rolling elements	**single-row cylindrical roller bearing**
Basic dynamic load rating C	**370 kN**
Basic static load rating C0	**350 kN**
Mass	**6.21 kg**