Cylindrical roller bearing N320-EM1-C3 FAG

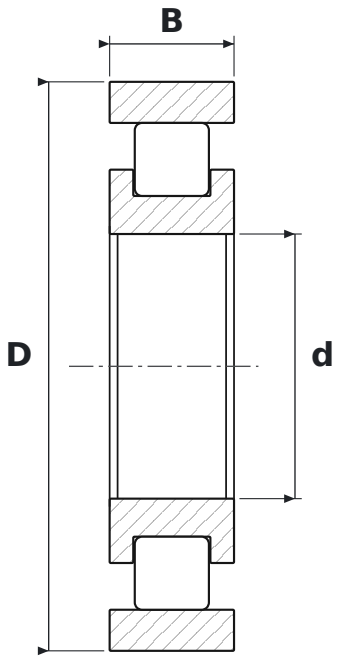

DIMENSIONS

d	bore diameter	**100 mm**
D	outside diameter	**215 mm**
B	width	**47 mm**

WHAT N320-EM1-C3 MEANS

E	reinforced design, higher load rating
M1	koszyk mosiężny masywny, dwuczęściowy, prowadzony na wałeczkach
C3	radial clearance greater than normal

SPECIFICATIONS

Manufacturer	**FAG**
Manufacturer designation	**N320-EM1-C3**
Rolling elements	**single-row cylindrical roller bearing**
Basic dynamic load rating C	**450 kN**
Basic static load rating C0	**425 kN**
Mass	**8.8 kg**