Cylindrical roller bearing N320 WC3 NSK

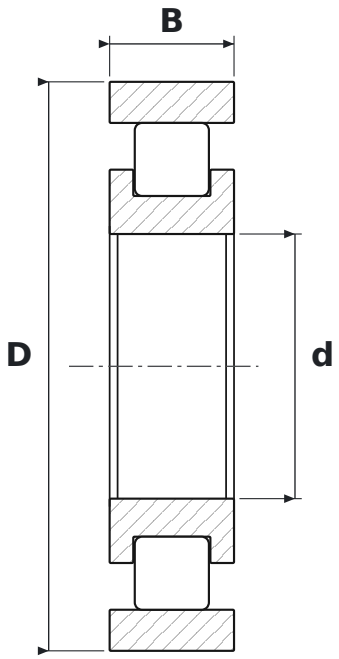

DIMENSIONS

d	bore diameter	**100 mm**
D	outside diameter	**215 mm**
B	width	**47 mm**

WHAT N320 WC3 MEANS

W	koszyk stalowy tłoczony
C3	radial clearance greater than normal

SPECIFICATIONS

Manufacturer	**NSK**
Manufacturer designation	**N320 WC3**
Rolling elements	**single-row cylindrical roller bearing**
Mass	**7.32 kg**