Cylindrical roller bearing N321 M NSK

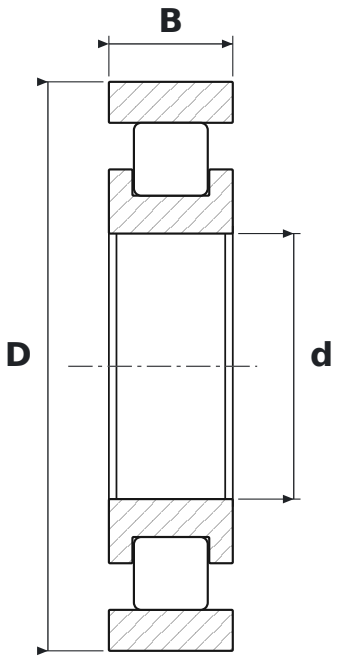

DIMENSIONS

d	bore diameter	**105 mm**
D	outside diameter	**225 mm**
B	width	**49 mm**

SPECIFICATIONS

Manufacturer	**NSK**
Manufacturer designation	**N321 M**
Rolling elements	**single-row cylindrical roller bearing**
M	**machined brass cage**
Seal	**open – no seals**
Radial internal clearance	**CN – normal**