Cylindrical roller bearing N326 M NSK

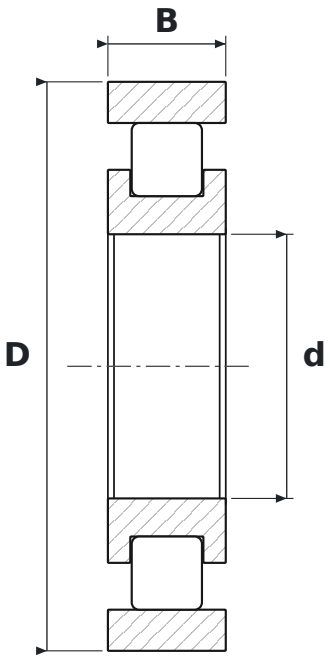

DIMENSIONS

d	bore diameter	**130 mm**
D	outside diameter	**280 mm**
B	width	**58 mm**

SPECIFICATIONS

Manufacturer	**NSK**
Manufacturer designation	**N326 M**
Rolling elements	**single-row cylindrical roller bearing**
M	**machined brass cage**
Seal	**open – no seals**
Radial internal clearance	**CN – normal**
Mass	**17.5 kg**