Cylindrical roller bearing N328 M NSK

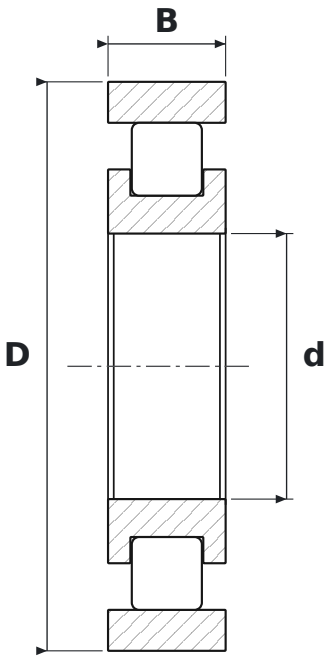

DIMENSIONS

d	bore diameter	**140 mm**
D	outside diameter	**300 mm**
B	width	**62 mm**

SPECIFICATIONS

Manufacturer	**NSK**
Manufacturer designation	**N328 M**
Rolling elements	**single-row cylindrical roller bearing**
M	**machined brass cage**
Seal	**open – no seals**
Radial internal clearance	**CN – normal**
Mass	**19.2 kg**