Cylindrical roller bearing NAG4905 UU IKO

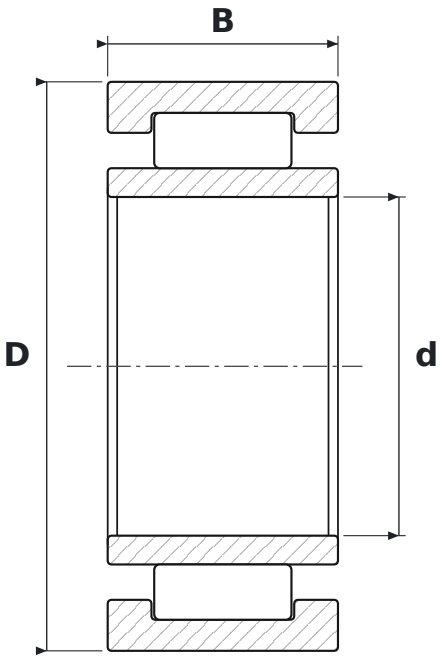

DIMENSIONS

d	bore diameter	**25 mm**
D	outside diameter	**42 mm**
B	width	**17 mm**

SPECIFICATIONS

Manufacturer	**IKO**
Manufacturer designation	**NAG4905 UU**
Rolling elements	**cylindrical roller bearing**
Seal	**open – no seals**
Radial internal clearance	**CN – normal**