Cylindrical roller bearing NCF2220-V-C3 ZEN

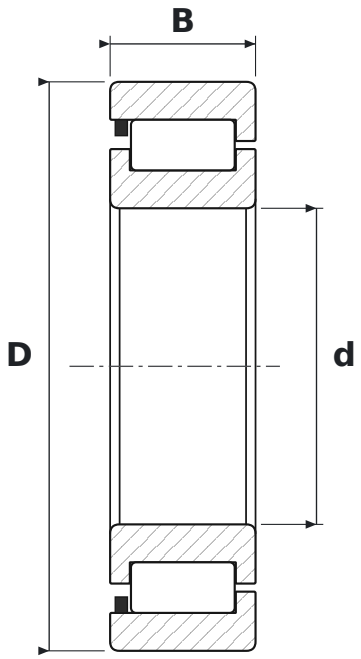

DIMENSIONS

d	bore diameter	**100 mm**
D	outside diameter	**180 mm**
B	width	**46 mm**

SPECIFICATIONS

Manufacturer	**ZEN**
Manufacturer designation	**NCF2220-V-C3**
Rolling elements	**single-row cylindrical roller bearing, full complement**
V	**manufacturer design code**
C3	**radial clearance greater than normal**
Seal	**open – no seals**