CASTOMER

DATASHEET

Cylindrical roller bearing NCF2220 V ZEN

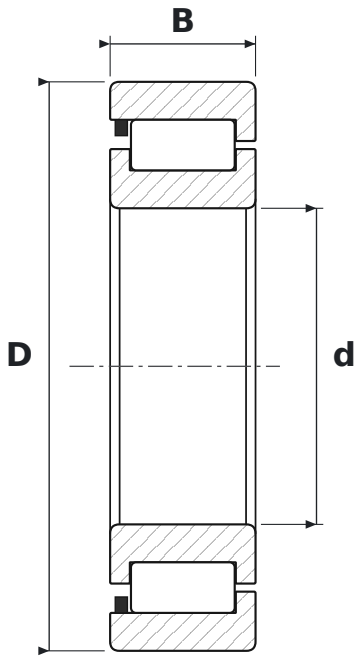

DIMENSIONS

d	bore diameter	**100 mm**
D	outside diameter	**180 mm**
B	width	**46 mm**

SPECIFICATIONS

Manufacturer	**ZEN**
Manufacturer designation	**NCF2220 V**
Rolling elements	**single-row cylindrical roller bearing, full complement**
V	**manufacturer design code**
Seal	**open – no seals**
Radial internal clearance	**CN – normal**
Mass	**5.12 kg**