Cylindrical roller bearing NCF2230-V NKE

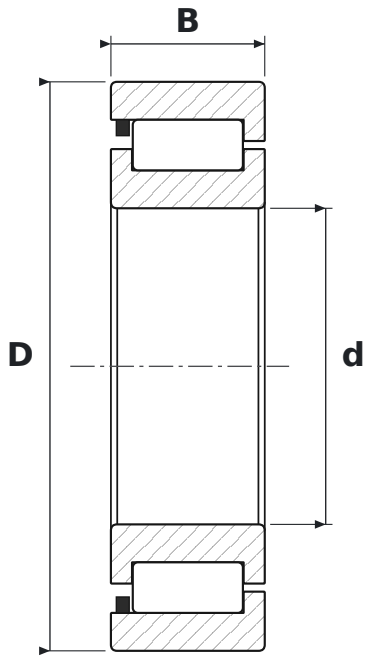

DIMENSIONS

d	bore diameter	**150 mm**
D	outside diameter	**270 mm**
B	width	**73 mm**

SPECIFICATIONS

Manufacturer	**NKE**
Manufacturer designation	**NCF2230-V**
Rolling elements	**single-row cylindrical roller bearing, full complement**
V	**łożysko pełnotoczne – bez koszyka**
Seal	**open – no seals**
Radial internal clearance	**CN – normal**