Cylindrical roller bearing NCF2230 V ZEN

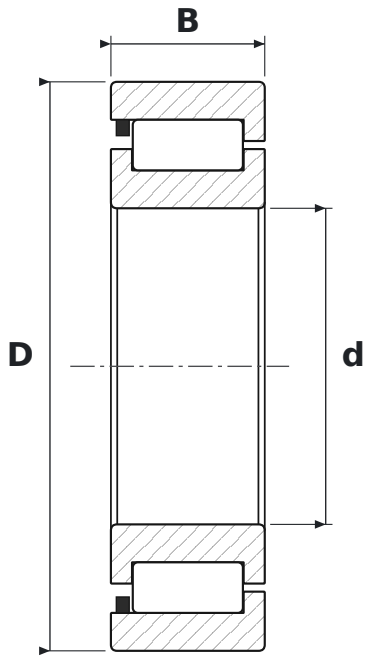

DIMENSIONS

d	bore diameter	**150 mm**
D	outside diameter	**270 mm**
B	width	**73 mm**

SPECIFICATIONS

Manufacturer	**ZEN**
Manufacturer designation	**NCF2230 V**
Rolling elements	**single-row cylindrical roller bearing, full complement**
V	**manufacturer design code**
Seal	**open – no seals**
Radial internal clearance	**CN – normal**