Cylindrical roller bearing NCF2230 VC3 NKE

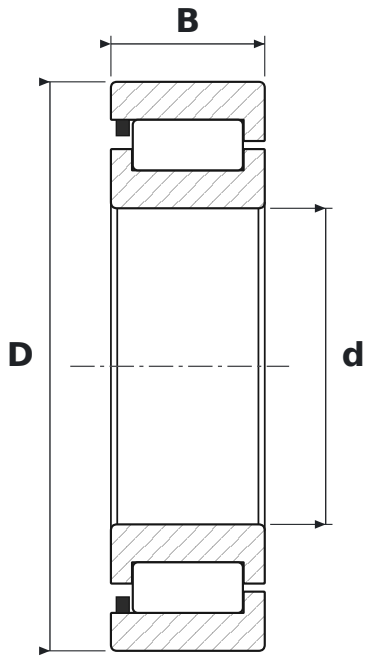

DIMENSIONS

d	bore diameter	**150 mm**
D	outside diameter	**270 mm**
B	width	**73 mm**

WHAT NCF2230 VC3 MEANS

V	łożysko pełnotoczne – bez koszyka
C3	radial clearance greater than normal

SPECIFICATIONS

Manufacturer	**NKE**
Manufacturer designation	**NCF2230 VC3**
Rolling elements	**single-row cylindrical roller bearing, full complement**
Mass	**18 kg**