Cylindrical roller bearing NCF2232-V-C3 NKE

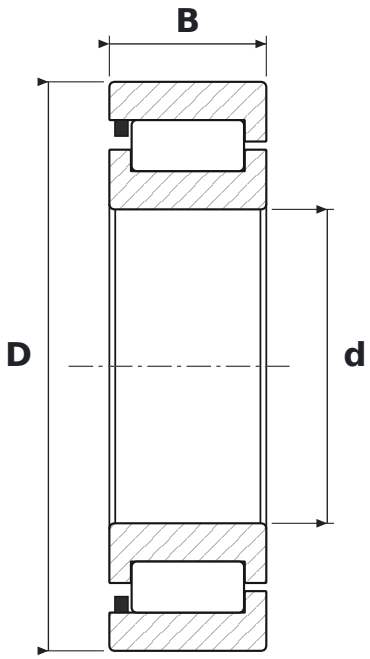

DIMENSIONS

d	bore diameter	**160 mm**
D	outside diameter	**290 mm**
B	width	**80 mm**

WHAT NCF2232-V-C3 MEANS

V	łożysko pełnotoczne – bez koszyka
C3	radial clearance greater than normal

SPECIFICATIONS

Manufacturer	**NKE**
Manufacturer designation	**NCF2232-V-C3**
Rolling elements	**single-row cylindrical roller bearing, full complement**