Cylindrical roller bearing NCF3020-V-C3 NKE

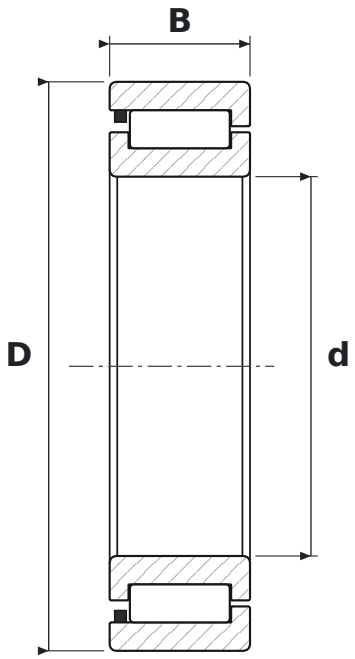

DIMENSIONS

d	bore diameter	**100 mm**
D	outside diameter	**150 mm**
B	width	**37 mm**

WHAT NCF3020-V-C3 MEANS

V	łożysko pełnotoczne – bez koszyka
C3	radial clearance greater than normal

SPECIFICATIONS

Manufacturer	**NKE**
Manufacturer designation	**NCF3020-V-C3**
Rolling elements	**single-row cylindrical roller bearing, full complement**