CASTOMER

DATASHEET

Cylindrical roller bearing NCF3020 V NKE

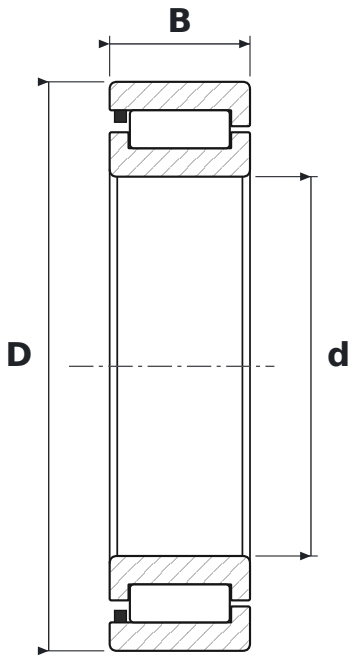

DIMENSIONS

d	bore diameter	**100 mm**
D	outside diameter	**150 mm**
B	width	**37 mm**

SPECIFICATIONS

Manufacturer	**NKE**
Manufacturer designation	**NCF3020 V**
Rolling elements	**single-row cylindrical roller bearing, full complement**
V	**łożysko pełnotoczne – bez koszyka**
Seal	**open – no seals**
Radial internal clearance	**CN – normal**
Mass	**2.2 kg**