Cylindrical roller bearing NJ202 ECP/C3 SKF

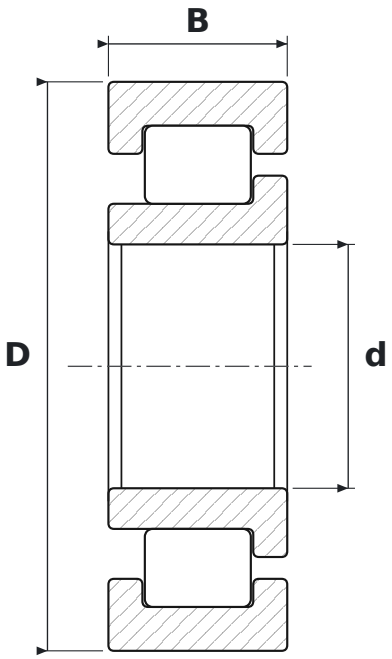

DIMENSIONS

d	bore diameter	**15 mm**
D	outside diameter	**35 mm**
B	width	**11 mm**

WHAT NJ202 ECP/C3 MEANS

ECP	EC design, polyamide cage (SKF)
C3	radial clearance greater than normal

SPECIFICATIONS

Manufacturer	**SKF**
Manufacturer designation	**NJ202 ECP/C3**
Rolling elements	**single-row cylindrical roller bearing**