# Cylindrical roller bearing NJ204 C3 NACHI

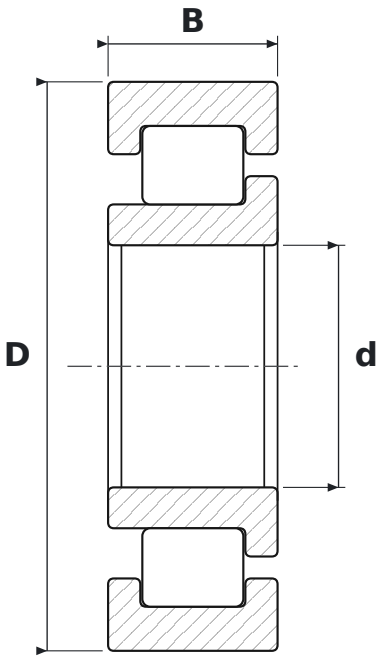


## DIMENSIONS

| | | |
|---|---|---|
| **d** | bore diameter | **20 mm** |
| **D** | outside diameter | **47 mm** |
| **B** | width | **14 mm** |

## SPECIFICATIONS

| | |
|---|---|
| Manufacturer | **NACHI** |
| Manufacturer designation | **NJ204 C3** |
| Rolling elements | **single-row cylindrical roller bearing** |
| C3 | **radial clearance greater than normal** |
| Seal | **open – no seals** |