Cylindrical roller bearing NJ204 EG15 SNR

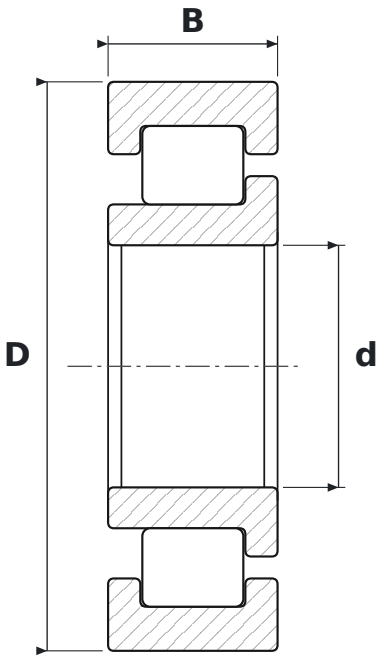

DIMENSIONS

d	bore diameter	**20 mm**
D	outside diameter	**47 mm**
B	width	**14 mm**

WHAT NJ204 EG15 MEANS

E	reinforced design, higher load rating
G15	koszyk poliamidowy wzmocniony włóknem szklanym

SPECIFICATIONS

Manufacturer	**SNR**
Manufacturer designation	**NJ204 EG15**
Rolling elements	**single-row cylindrical roller bearing**