Cylindrical roller bearing NJ204-EM1-A FAG

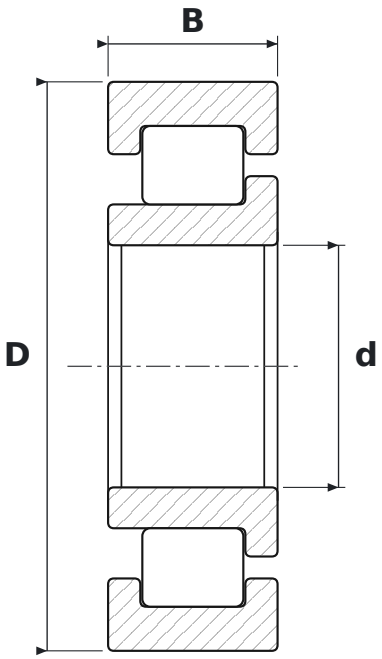

DIMENSIONS

d	bore diameter	**20 mm**
D	outside diameter	**47 mm**
B	width	**14 mm**

WHAT NJ204-EM1-A MEANS

E	reinforced design, higher load rating
M1	koszyk mosiężny masywny, dwuczęściowy, prowadzony na wałeczkach

SPECIFICATIONS

Manufacturer	**FAG**
Manufacturer designation	**NJ204-EM1-A**
Rolling elements	**single-row cylindrical roller bearing**
Mass	**0.127 kg**