Cylindrical roller bearing NJ207-EM1-A FAG

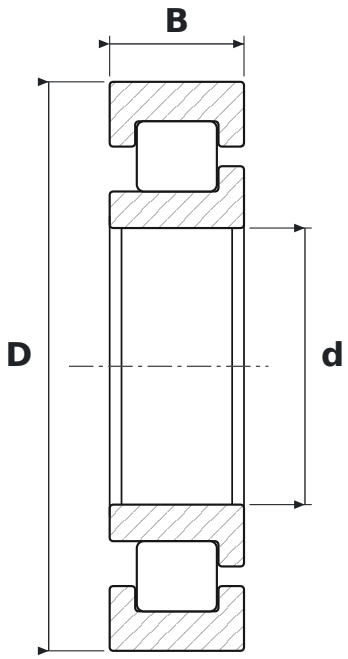

DIMENSIONS

d	bore diameter	**35 mm**
D	outside diameter	**72 mm**
B	width	**17 mm**

WHAT NJ207-EM1-A MEANS

E	reinforced design, higher load rating
M1	koszyk mosiężny masywny, dwuczęściowy, prowadzony na wałeczkach

SPECIFICATIONS

Manufacturer	**FAG**
Manufacturer designation	**NJ207-EM1-A**
Rolling elements	**single-row cylindrical roller bearing**