# Cylindrical roller bearing NJ207-EM1-A-C3 FAG

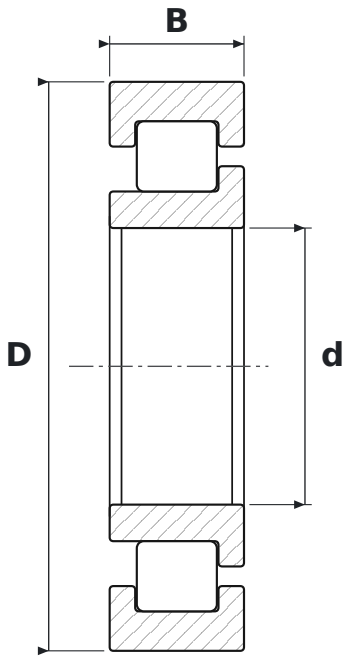


## DIMENSIONS

| | | |
|---|---|---|
| **d** | bore diameter | **35 mm** |
| **D** | outside diameter | **72 mm** |
| **B** | width | **17 mm** |

## WHAT NJ207-EM1-A-C3 MEANS

| | |
|---|---|
| **E** | reinforced design, higher load rating |
| **M1** | koszyk mosiężny masywny, dwuczęściowy, prowadzony na wałeczkach |
| **C3** | radial clearance greater than normal |

## SPECIFICATIONS

| | |
|---|---|
| Manufacturer | **FAG** |
| Manufacturer designation | **NJ207-EM1-A-C3** |
| Rolling elements | **single-row cylindrical roller bearing** |
| Mass | **0.33 kg** |