Cylindrical roller bearing NJ208 RC3 KOYO

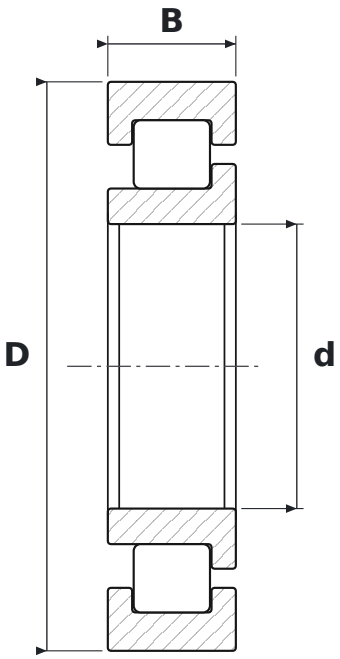

DIMENSIONS

d	bore diameter	**40 mm**
D	outside diameter	**80 mm**
B	width	**18 mm**

WHAT NJ208 RC3 MEANS

R	wykonanie o zwiększonej nośności
C3	radial clearance greater than normal

SPECIFICATIONS

Manufacturer	**KOYO**
Manufacturer designation	**NJ208 RC3**
Rolling elements	**single-row cylindrical roller bearing**