# Cylindrical roller bearing NJ209 ECP SKF

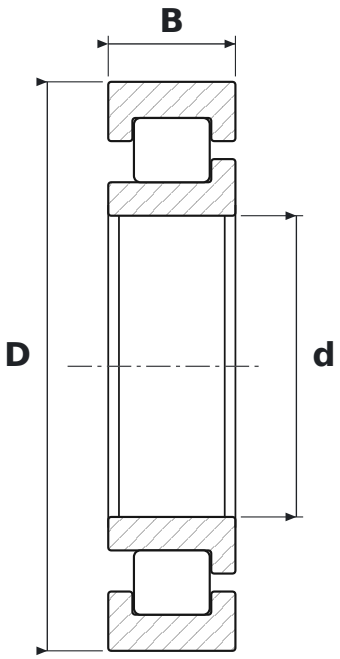


## DIMENSIONS

| | | |
|---|---|---|
| **d** | bore diameter | **45 mm** |
| **D** | outside diameter | **85 mm** |
| **B** | width | **19 mm** |

## SPECIFICATIONS

| | |
|---|---|
| Manufacturer | **SKF** |
| Manufacturer designation | **NJ209 ECP** |
| Rolling elements | **single-row cylindrical roller bearing** |
| ECP | **EC design, polyamide cage (SKF)** |
| Seal | **open – no seals** |
| Radial internal clearance | **CN – normal** |
| Cage | **Polyamide** |