CASTOMER

DATASHEET

Cylindrical roller bearing NJ209 EWC3 NSK

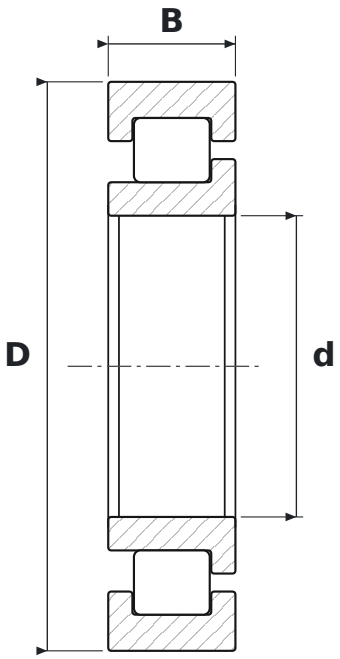

DIMENSIONS

d	bore diameter	**45 mm**
D	outside diameter	**85 mm**
B	width	**19 mm**

WHAT NJ209 EWC3 MEANS

EW	reinforced design, steel cage (NSK)
C3	radial clearance greater than normal

SPECIFICATIONS

Manufacturer	**NSK**
Manufacturer designation	**NJ209 EWC3**
Rolling elements	**single-row cylindrical roller bearing**