Cylindrical roller bearing NJ211 R KOYO

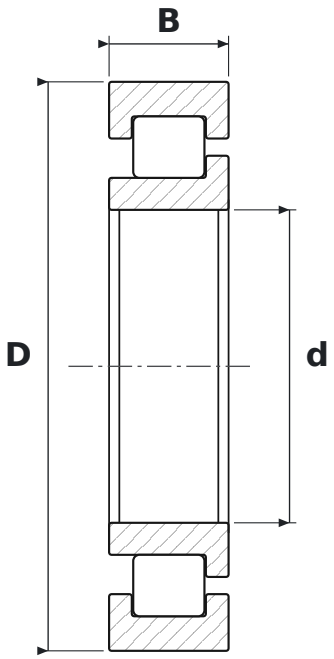

DIMENSIONS

d	bore diameter	**55 mm**
D	outside diameter	**100 mm**
B	width	**21 mm**

SPECIFICATIONS

Manufacturer	**KOYO**
Manufacturer designation	**NJ211 R**
Rolling elements	**single-row cylindrical roller bearing**
Seal	**open – no seals**
Radial internal clearance	**CN – normal**