Cylindrical roller bearing NJ212 ECJ SKF

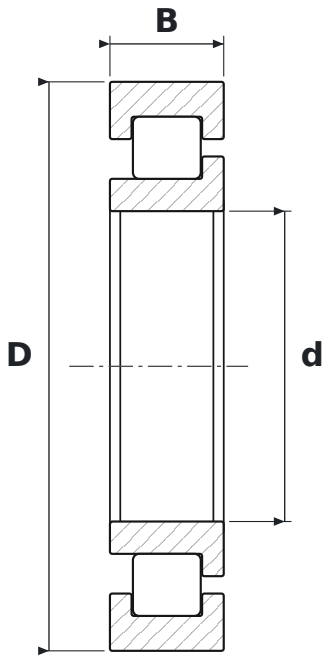

DIMENSIONS

d	bore diameter	**60 mm**
D	outside diameter	**110 mm**
B	width	**22 mm**

SPECIFICATIONS

Manufacturer	**SKF**
Manufacturer designation	**NJ212 ECJ**
Rolling elements	**single-row cylindrical roller bearing**
ECJ	**EC design, pressed steel cage (SKF)**
Seal	**open – no seals**
Radial internal clearance	**CN – normal**
Cage	**Steel**