# Cylindrical roller bearing NJ216 ETC3 NSK

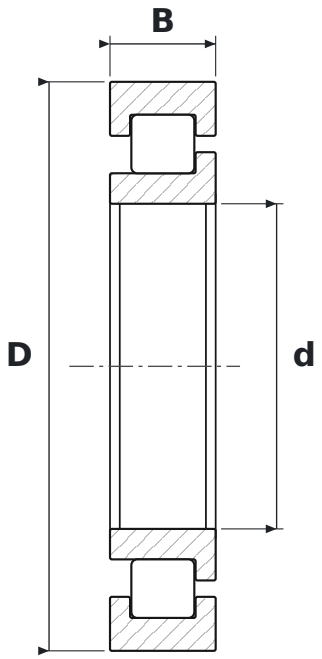


## DIMENSIONS

| | | |
|---|---|---|
| **d** | bore diameter | **80 mm** |
| **D** | outside diameter | **140 mm** |
| **B** | width | **26 mm** |

## WHAT NJ216 ETC3 MEANS

| | |
|---|---|
| **E** | reinforced design, higher load rating |
| **T** | koszyk z poliamidu 66 wzmocnionego włóknem szklanym |
| **C3** | radial clearance greater than normal |

## SPECIFICATIONS

| | |
|---|---|
| Manufacturer | **NSK** |
| Manufacturer designation | **NJ216 ETC3** |
| Rolling elements | **single-row cylindrical roller bearing** |