Cylindrical roller bearing NJ216 NACHI

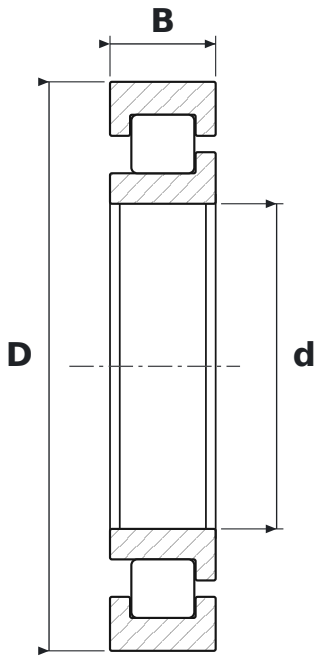

DIMENSIONS

d	bore diameter	**80 mm**
D	outside diameter	**140 mm**
B	width	**26 mm**

SPECIFICATIONS

Manufacturer	**NACHI**
Manufacturer designation	**NJ216**
Rolling elements	**single-row cylindrical roller bearing**
Seal	**open – no seals**
Radial internal clearance	**CN – normal**