Cylindrical roller bearing NJ218 C3 NACHI

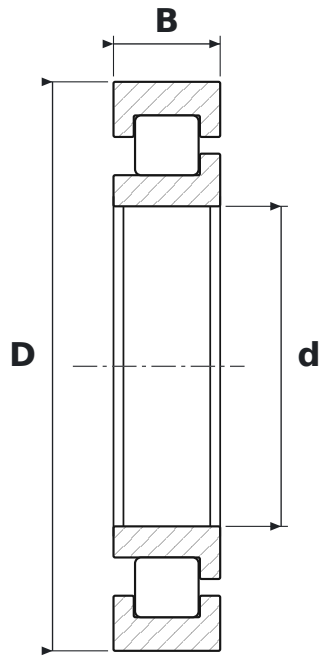

DIMENSIONS

d	bore diameter	**90 mm**
D	outside diameter	**160 mm**
B	width	**30 mm**

SPECIFICATIONS

Manufacturer	**NACHI**
Manufacturer designation	**NJ218 C3**
Rolling elements	**single-row cylindrical roller bearing**
C3	**radial clearance greater than normal**
Seal	**open – no seals**