# Cylindrical roller bearing NJ2205 ECP/C4 SKF

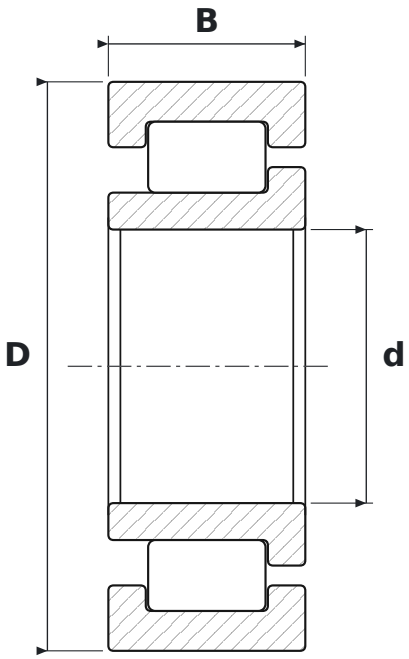


## DIMENSIONS

| | | |
|---|---|---|
| **d** | bore diameter | **25 mm** |
| **D** | outside diameter | **52 mm** |
| **B** | width | **18 mm** |

## WHAT NJ2205 ECP/C4 MEANS

| | |
|---|---|
| **ECP** | EC design, polyamide cage (SKF) |
| **C4** | large radial clearance |

## SPECIFICATIONS

| | |
|---|---|
| Manufacturer | **SKF** |
| Manufacturer designation | **NJ2205 ECP/C4** |
| Rolling elements | **single-row cylindrical roller bearing** |