Cylindrical roller bearing NJ2205-EM1-A FAG

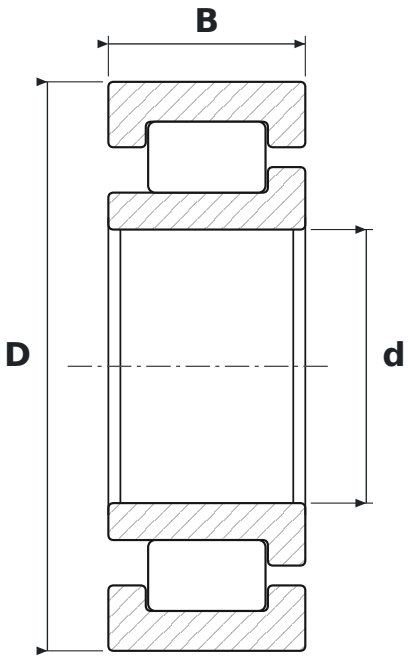

DIMENSIONS

d	bore diameter	**25 mm**
D	outside diameter	**52 mm**
B	width	**18 mm**

WHAT NJ2205-EM1-A MEANS

E	reinforced design, higher load rating
M1	koszyk mosiężny masywny, dwuczęściowy, prowadzony na wałeczkach

SPECIFICATIONS

Manufacturer	**FAG**
Manufacturer designation	**NJ2205-EM1-A**
Rolling elements	**single-row cylindrical roller bearing**
Mass	**0.189 kg**