Cylindrical roller bearing NJ2208 ECPC4 SKF

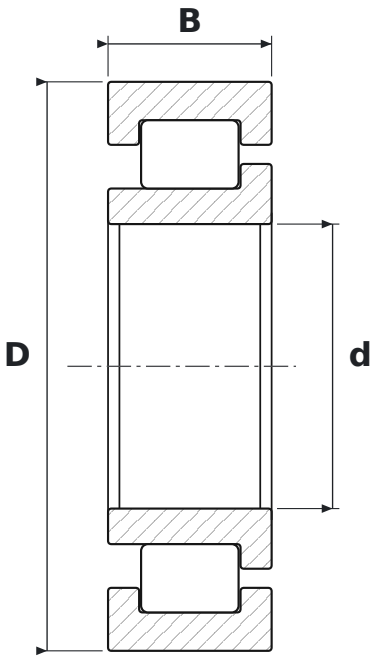

DIMENSIONS

d	bore diameter	**40 mm**
D	outside diameter	**80 mm**
B	width	**23 mm**

WHAT NJ2208 ECPC4 MEANS

ECP	EC design, polyamide cage (SKF)
C4	large radial clearance

SPECIFICATIONS

Manufacturer	**SKF**
Manufacturer designation	**NJ2208 ECPC4**
Rolling elements	**single-row cylindrical roller bearing**
Mass	**0.499 kg**