# Cylindrical roller bearing NJ2209-E-M1-C4 FAG

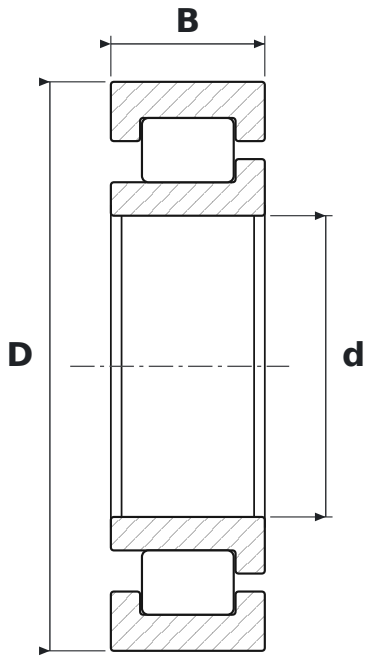


## DIMENSIONS

| | | |
|---|---|---|
| **d** | bore diameter | **45 mm** |
| **D** | outside diameter | **85 mm** |
| **B** | width | **23 mm** |

## WHAT NJ2209-E-M1-C4 MEANS

| | |
|---|---|
| **E** | reinforced design, higher load rating |
| **M1** | koszyk mosiężny masywny, dwuczęściowy, prowadzony na wałeczkach |
| **C4** | large radial clearance |

## SPECIFICATIONS

| | |
|---|---|
| Manufacturer | **FAG** |
| Manufacturer designation | **NJ2209-E-M1-C4** |
| Rolling elements | **single-row cylindrical roller bearing** |