Cylindrical roller bearing NJ2209 KOYO

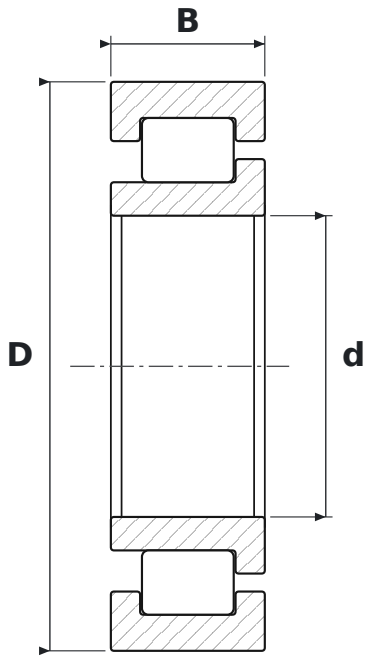

DIMENSIONS

d	bore diameter	**45 mm**
D	outside diameter	**85 mm**
B	width	**23 mm**

SPECIFICATIONS

Manufacturer	**KOYO**
Manufacturer designation	**NJ2209**
Rolling elements	**single-row cylindrical roller bearing**
Seal	**open – no seals**
Radial internal clearance	**CN – normal**