Cylindrical roller bearing NJ226 ET NSK

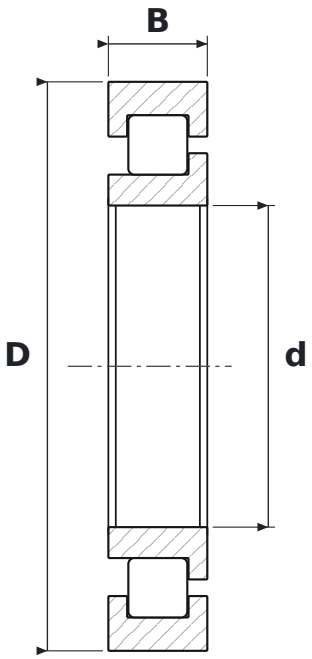

DIMENSIONS

d	bore diameter	**130 mm**
D	outside diameter	**230 mm**
B	width	**40 mm**

WHAT NJ226 ET MEANS

E	reinforced design, higher load rating
T	koszyk z poliamidu 66 wzmocnionego włóknem szklanym

SPECIFICATIONS

Manufacturer	**NSK**
Manufacturer designation	**NJ226 ET**
Rolling elements	**single-row cylindrical roller bearing**
Mass	**6 kg**