Cylindrical roller bearing NJ228 EMC3 NSK

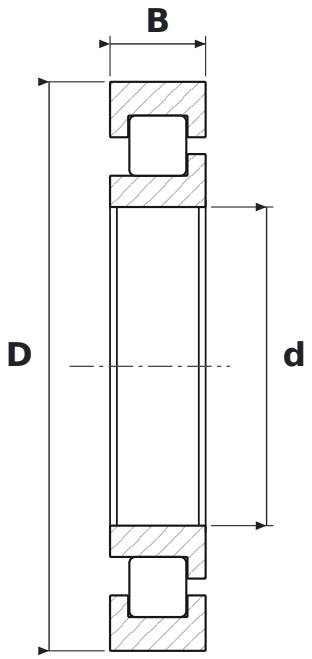

DIMENSIONS

d	bore diameter	**140 mm**
D	outside diameter	**250 mm**
B	width	**42 mm**

WHAT NJ228 EMC3 MEANS

EM	machined brass cage (NSK)
C3	radial clearance greater than normal

SPECIFICATIONS

Manufacturer	**NSK**
Manufacturer designation	**NJ228 EMC3**
Rolling elements	**single-row cylindrical roller bearing**
Mass	**10 kg**