Cylindrical roller bearing NJ230 ECJ SKF

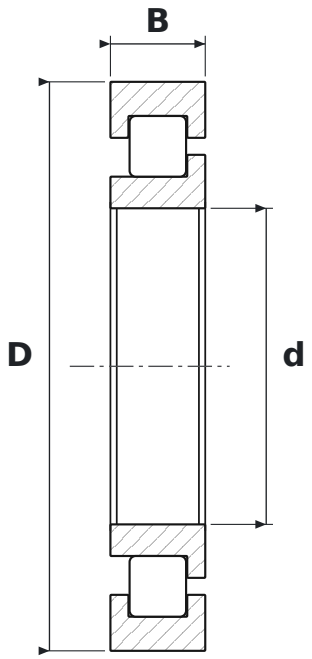

DIMENSIONS

d	bore diameter	**150 mm**
D	outside diameter	**270 mm**
B	width	**45 mm**

SPECIFICATIONS

Manufacturer	**SKF**
Manufacturer designation	**NJ230 ECJ**
Rolling elements	**single-row cylindrical roller bearing**
ECJ	**EC design, pressed steel cage (SKF)**
Seal	**open – no seals**
Radial internal clearance	**CN – normal**
Cage	**Steel**
Mass	**10.585 kg**