Cylindrical roller bearing NJ230 ECJC3 SKF

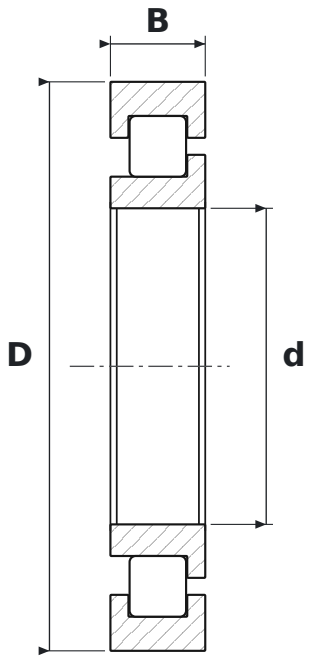

DIMENSIONS

d	bore diameter	**150 mm**
D	outside diameter	**270 mm**
B	width	**45 mm**

WHAT NJ230 ECJC3 MEANS

ECJ	EC design, pressed steel cage (SKF)
C3	radial clearance greater than normal

SPECIFICATIONS

Manufacturer	**SKF**
Manufacturer designation	**NJ230 ECJC3**
Rolling elements	**single-row cylindrical roller bearing**
Mass	**10.585 kg**