Cylindrical roller bearing NJ2315 ECP/C4VQ015 SKF

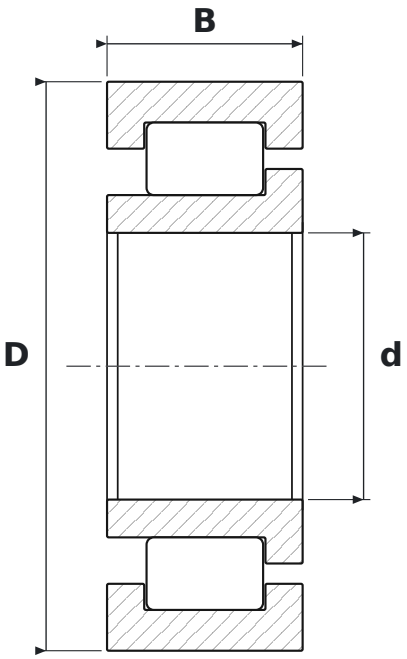

DIMENSIONS

d	bore diameter	**75 mm**
D	outside diameter	**160 mm**
B	width	**55 mm**

SPECIFICATIONS

Manufacturer	**SKF**
Manufacturer designation	**NJ2315 ECP/C4VQ015**
Rolling elements	**single-row cylindrical roller bearing**
ECP	**EC design, polyamide cage (SKF)**
C4	**large radial clearance**
Seal	**open – no seals**
Cage	**Polyamide**