Cylindrical roller bearing NJ2316 WC3 NSK

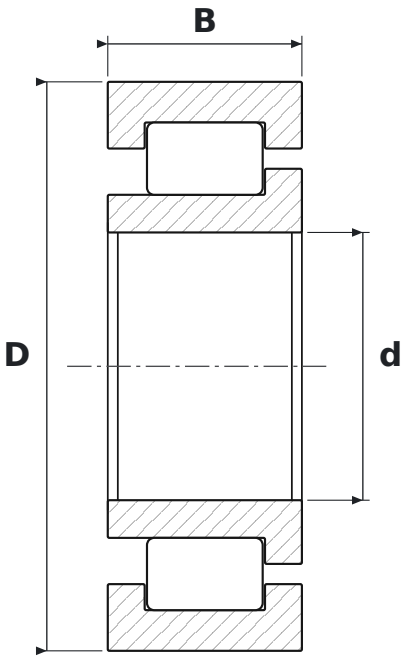

DIMENSIONS

d	bore diameter	**80 mm**
D	outside diameter	**170 mm**
B	width	**58 mm**

WHAT NJ2316 WC3 MEANS

W	koszyk stalowy tłoczony
C3	radial clearance greater than normal

SPECIFICATIONS

Manufacturer	**NSK**
Manufacturer designation	**NJ2316 WC3**
Rolling elements	**single-row cylindrical roller bearing**