Cylindrical roller bearing NJ2324 EM NSK

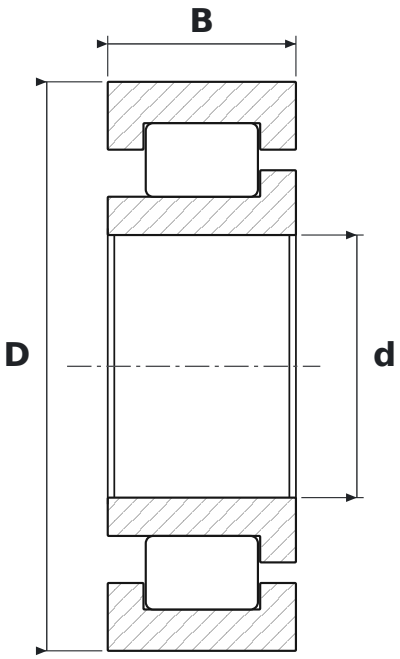

DIMENSIONS

d	bore diameter	**120 mm**
D	outside diameter	**260 mm**
B	width	**86 mm**

SPECIFICATIONS

Manufacturer	**NSK**
Manufacturer designation	**NJ2324 EM**
Rolling elements	**single-row cylindrical roller bearing**
EM	**machined brass cage (NSK)**
Seal	**open – no seals**
Radial internal clearance	**CN – normal**
Mass	**24 kg**