Cylindrical roller bearing NJ234-E-CA-M-C3 FAG

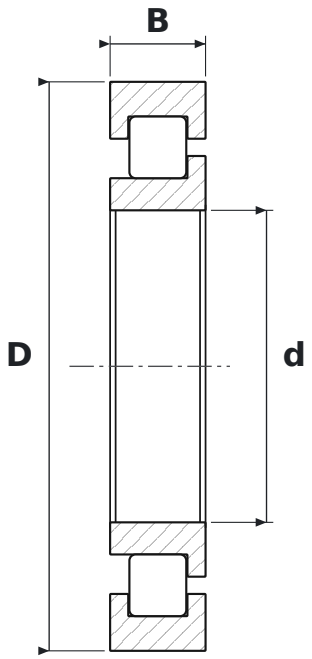

DIMENSIONS

d	bore diameter	**170 mm**
D	outside diameter	**310 mm**
B	width	**52 mm**

WHAT NJ234-E-CA-M-C3 MEANS

E	reinforced design, higher load rating
CA	machined brass cage, roller centred (SKF)
M	machined brass cage
C3	radial clearance greater than normal

SPECIFICATIONS

Manufacturer	**FAG**
Manufacturer designation	**NJ234-E-CA-M-C3**
Rolling elements	**single-row cylindrical roller bearing**