Cylindrical roller bearing NJ234-EM1 FAG

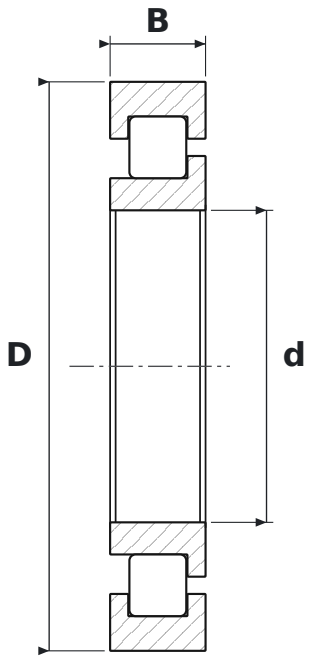

DIMENSIONS

d	bore diameter	**170 mm**
D	outside diameter	**310 mm**
B	width	**52 mm**

WHAT NJ234-EM1 MEANS

E	reinforced design, higher load rating
M1	koszyk mosiężny masywny, dwuczęściowy, prowadzony na wałeczkach

SPECIFICATIONS

Manufacturer	**FAG**
Manufacturer designation	**NJ234-EM1**
Rolling elements	**single-row cylindrical roller bearing**
Basic dynamic load rating C	**700 kN**
Basic static load rating C0	**780 kN**
Mass	**18.6 kg**