Cylindrical roller bearing NJ234 M NSK

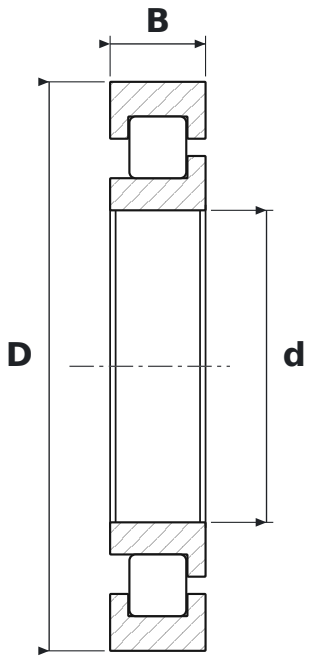

DIMENSIONS

d	bore diameter	**170 mm**
D	outside diameter	**310 mm**
B	width	**52 mm**

SPECIFICATIONS

Manufacturer	**NSK**
Manufacturer designation	**NJ234 M**
Rolling elements	**single-row cylindrical roller bearing**
M	**machined brass cage**
Seal	**open – no seals**
Radial internal clearance	**CN – normal**