Cylindrical roller bearing NJ238-EM1-C3 FAG

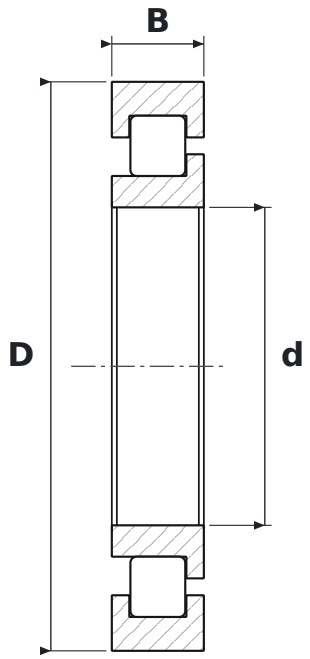

DIMENSIONS

d	bore diameter	**190 mm**
D	outside diameter	**340 mm**
B	width	**55 mm**

WHAT NJ238-EM1-C3 MEANS

E	reinforced design, higher load rating
M1	koszyk mosiężny masywny, dwuczęściowy, prowadzony na wałeczkach
C3	radial clearance greater than normal

SPECIFICATIONS

Manufacturer	**FAG**
Manufacturer designation	**NJ238-EM1-C3**
Rolling elements	**single-row cylindrical roller bearing**
Basic dynamic load rating C	**680 kN**
Basic static load rating C0	**930 kN**
Mass	**23.4 kg**