Cylindrical roller bearing NJ240 EM NSK

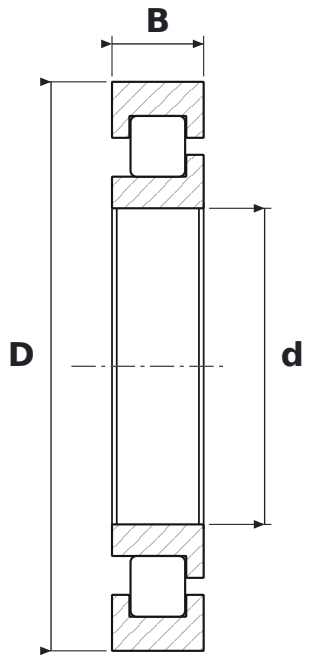

DIMENSIONS

d	bore diameter	**200 mm**
D	outside diameter	**360 mm**
B	width	**58 mm**

SPECIFICATIONS

Manufacturer	**NSK**
Manufacturer designation	**NJ240 EM**
Rolling elements	**single-row cylindrical roller bearing**
EM	**machined brass cage (NSK)**
Seal	**open – no seals**
Radial internal clearance	**CN – normal**