CASTOMER

DATASHEET

Cylindrical roller bearing NJ304 ECPC3 SKF

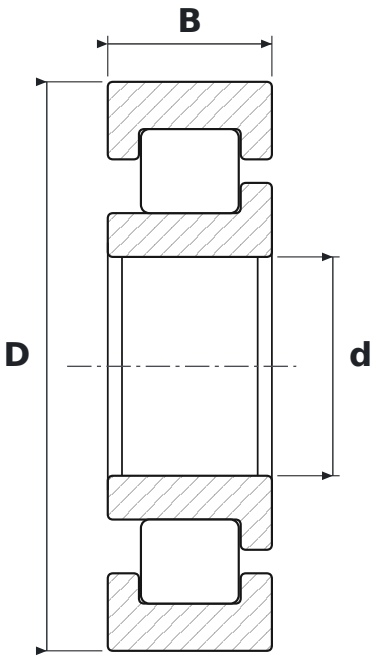

DIMENSIONS

d	bore diameter	**20 mm**
D	outside diameter	**52 mm**
B	width	**15 mm**

WHAT NJ304 ECPC3 MEANS

ECP	EC design, polyamide cage (SKF)
C3	radial clearance greater than normal

SPECIFICATIONS

Manufacturer	**SKF**
Manufacturer designation	**NJ304 ECPC3**
Rolling elements	**single-row cylindrical roller bearing**