Cylindrical roller bearing NJ304-EM1 FAG

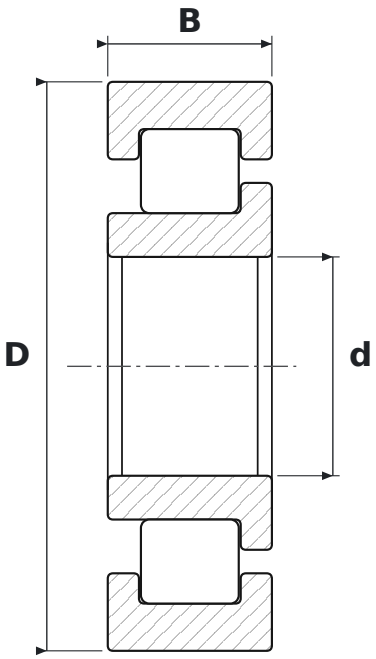

DIMENSIONS

d	bore diameter	**20 mm**
D	outside diameter	**52 mm**
B	width	**15 mm**

WHAT NJ304-EM1 MEANS

E	reinforced design, higher load rating
M1	koszyk mosiężny masywny, dwuczęściowy, prowadzony na wałeczkach

SPECIFICATIONS

Manufacturer	**FAG**
Manufacturer designation	**NJ304-EM1**
Rolling elements	**single-row cylindrical roller bearing**
Mass	**0.168 kg**