Cylindrical roller bearing NJ305 ET NSK

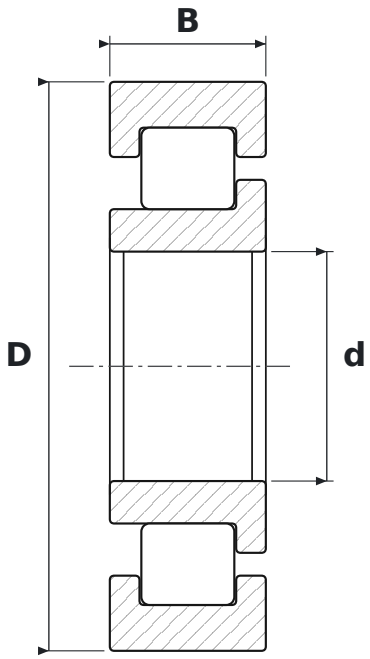

DIMENSIONS

d	bore diameter	**25 mm**
D	outside diameter	**62 mm**
B	width	**17 mm**

WHAT NJ305 ET MEANS

E	reinforced design, higher load rating
T	koszyk z poliamidu 66 wzmocnionego włóknem szklanym

SPECIFICATIONS

Manufacturer	**NSK**
Manufacturer designation	**NJ305 ET**
Rolling elements	**single-row cylindrical roller bearing**